VE Series

Floor Platforms and Scales

Stainless steel platform shown with T31XW indicator

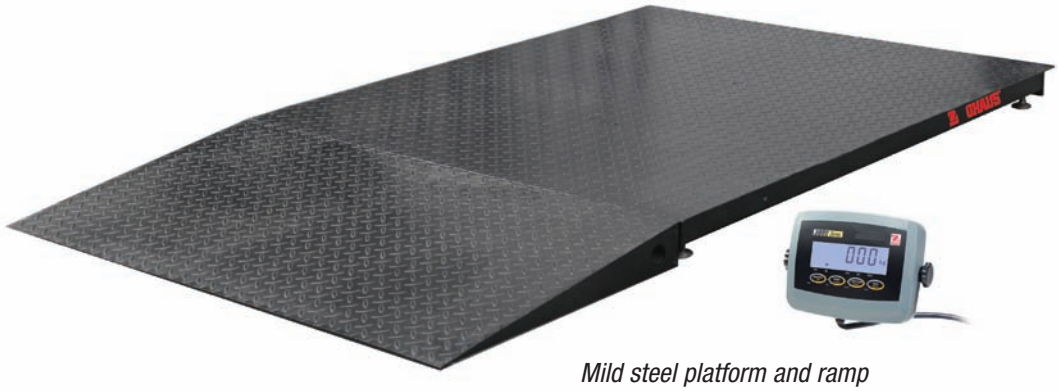

Mild steel platform and ramp shown with T31P indicator

Affordability, Durability, Ohaus Quality & Value

The OHAUS VE Series floor platforms and scales are the value solution for your dry or washdown weighing needs in industrial and commercial applications. Their high-quality material and construction are designed to minimize distortion under heavy loads, and ensure years of dependable performance. Available also with corresponding ramps and mounting accessories, the OHAUS VE Series floor platforms and scales offers a unique combination of value, quality and dependability that your company can rely on.

Standard Features Include:

- 1,500kg and 3,000kg capacities in three platform sizes: 1m x 1m, 1.25m x 1.25m, 1.5m x 1.5m
- Two platform versions with structural bracing that ensures a stiff and solid construction.
- Two rugged OHAUS indicator models:
  - T31P indicator features a high-impact ABS housing with key-holes on the rear cover for wall mounting
  - T31XW indicator features a 304 stainless steel IP66 housing
- Four x OIML R60 approved IP67 alloy steel load cells
- Four x load cell mounted feet, self-swiveling ball-in-cup design
- Side access IP65 dust and water immersion protected stainless steel junction box with 5m long cable
- Includes two carbon steel eye bolts that allow easier lifting and positioning of the platform
- Available painted steel and stainless ramps with bottom support ribs that resist bending under heavy loads
- Available second stage verified scale models 1:3000e with OHAUS indicators and fixed-location mounting plates
- OHAUS indicators featuring backlit LCD displays with high-visibility 25mm high digits, five weighing units (kg, g, lb, oz, lb:oz), rechargeable lead acid battery operation and piece counting function

VE Series Floor Platforms and Scales

Specifications

Platform Models	VE1500S	VE1500R	VE3000R	VE1500L	VE3000L
Platform Material	Painted carbon steel, raised treaded surface, fixed top plate 5mm thick				
Net Weight	83kg	123kg		170kg	
Platform Models	**VE1500SW**	**VE1500RW**	**VE3000RW**	**VE1500LW**	**VE3000LW**
Platform Material	Stainless steel, sand-blasted flat surface, fixed top plate 5mm thick				
Net Weight	68kg	101kg		134kg	
Platform Size (A x B x min H)	1m x 1m x 9cm	1.25m x 1.25m x 9cm		1.5m x 1.5m x 9cm	
Capacity x Readability	1500kg x 0.5kg	1500kg x 0.5kg	3000kg x 1kg	1500kg x 0.5kg	3000kg x 1kg
Approval Resolution	1:3000e				
Operating Temperature / Humidity	-10°C to 40°C / 0% to 95% relative humidity, non-condensing				
Maximum Central Load	125% of rated capacity				
Load Cell	4 x IP67 alloy steel, shear beam, OIML C3, 5m cable length				
Load Cell Capacity Emax	1000kg	1000kg	1500kg	1000kg	1500kg
Output Impedance / Excitation Voltage	350 ohm ± 3.5 ohm / 5V~15V, DC/AC				
Feet	4 x self-swiveling ball-in-cup design with rubber bottom, adjustable height				
Junction Box	IP65, 304 stainless steel, with 5m long cable				
Scale Models (painted, with T31P indicator)*	**VE1500S31P**	**VE1500R31P**	**VE3000R31P**	**VE1500L31P**	**VE3000L31P**
Scale Models (stainless, with T31XW indicator)*	**VE1500S31XW**	**VE1500R31XW**	**VE3000R31XW**	**VE1500L31XW**	**VE3000L31XW**
Indicators	T31P, ABS plastic / T31XW, 304 stainless steel IP66				
Weighing Units	kg, g, lb, oz, lb:oz				
Display	Backlit LCD, 25 mm high, 6-digit, 7-segment				
Interface	Built-in RS232C, bi-directional				
Power	T31P, AC adapter / T31XW, universal switching power supply				
Battery	Internal rechargeable sealed lead acid battery (100-hour typical operation on full charge)				
Other Features	Piece Counting 1d min APW, Geographical gravity adjustment, Environmental filtering				

**For 2nd stage EC Type approved Class III models, add "M" at end of scale model name (ex., VE1500S31PM) (will require available foot plate kits in type approved installations)*

Options and Accessories **Ohaus Number**

Wall mount bracket kit, T31P.....80251747
Wall mount bracket kit, T31XW 80251748
Ramp kit, VE painted steel, 1m 72198338
Ramp kit, VE painted steel, 1.25m.....72198339
Ramp kit, VE painted steel, 1.5m.....72198340
Ramp kit, VE-W stainless steel, 1m 72198341
Ramp kit, VE-W stainless steel, 1.25m 72198342
Ramp kit, VE-W stainless steel, 1.5m 72198343
Foot plate kit, VE painted steel.....72198344
Foot plate kit, VE-W stainless steel 72198345

Approvals:

- Safety and EMC: EN60950, EN61326, FCC, CE, CULUS
- EC Type Approval:
  - T31xx Series Indicator: TC7085 / T5980
  - Load Cell: OIML R60 PTB D09-03.19
- Quality: Ohaus quality management system registered to ISO 9001:2000

Outline Dimensions *(Platform Size)

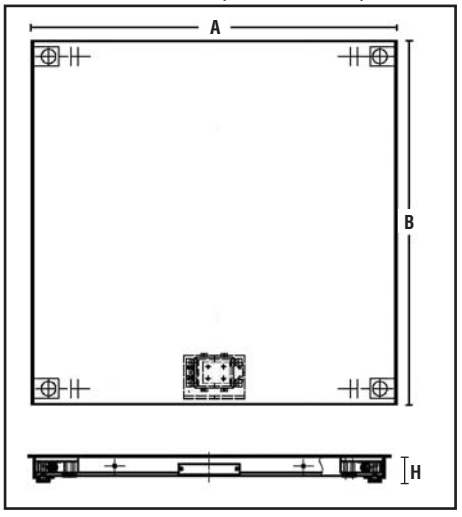

Structural Features

Accessories *(Painted Steel & Stainless Steel)*

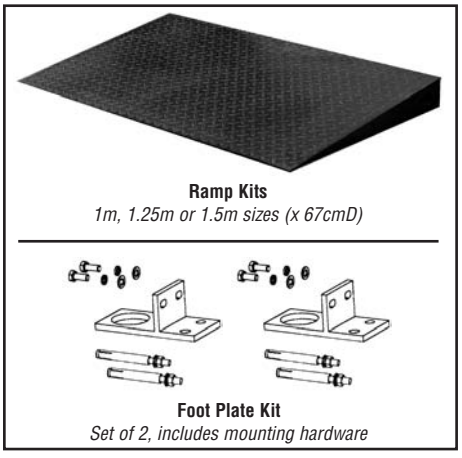

www.ohaus.com

*** ISO 9001:2000**
Registered Quality Management System

80774272_A © Copyright Ohaus Corporation